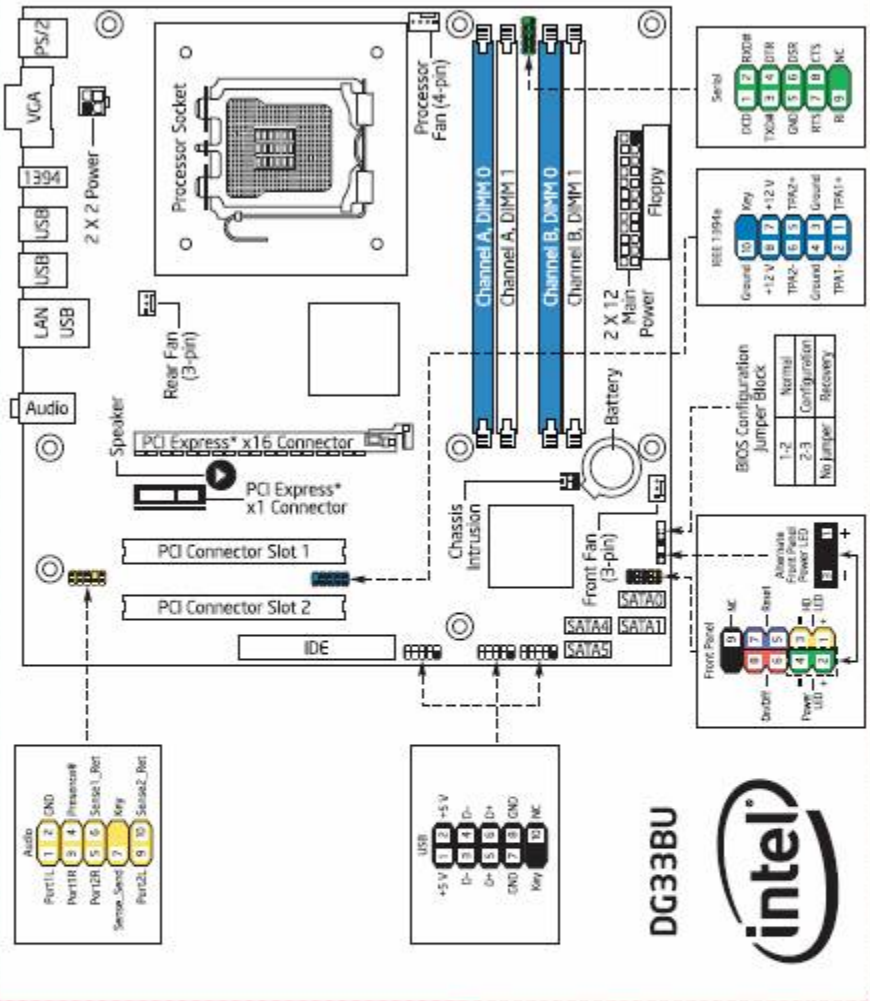

CAUTION

Risk of explosion if the battery is replaced with an incorrect type. Batteries should be recycled where possible. Disposal of used batteries must be in accordance with local environmental regulations.

Attach this label to the inside surface of the chassis.

Attach this label near the back panel connectors.

D83429-002

*Other names and brands may be claimed as the property of others.
Copyright* 2007, Intel Corporation. All rights reserved.